## General Description

Pilot Piston Style Dual Pilot Operated Check Valve. For additional information see Technical Tips on pages CV1-CV4.

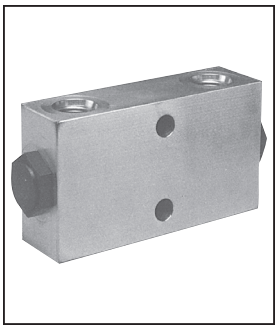

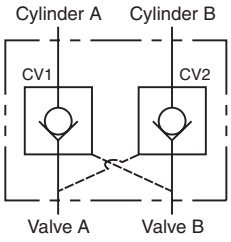


## Features

- Spherical poppet for low leakage
- "D"-Ring eliminates back-up rings
- Optional sealed pilot piston

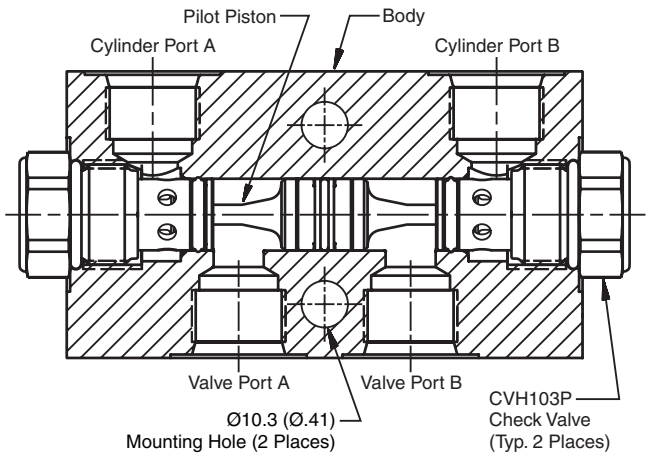


## Specifications

| | |
|---|---|
| **Maximum Flow** | 56 LPM (15 GPM) |
| **Maximum Inlet Pressure** | 210 Bar (3000 PSI) - CDP103<br>350 Bar (5000 PSI) - CDPH103 |
| **Leakage Across Check 150 SSU (32 cSt)** | 2 drops/min. (.13 cc/min.) |
| **Leakage Across Pilot Piston (No Seals)** | 312 cc/min<br>0.3 LPM (.08 GPM) |
| **Pilot Ratio** | 4:1 |
| **Pilot Piston Part Numbers** | No Seal - 717917<br>Nitrile Seal - 717917N<br>Fluorocarbon Seal - 717917V |
| **Cartridge Material** | All parts steel. All operating parts hardened steel. |
| **Body Material** | Aluminum - CDP103<br>Steel - CDPH103 |
| **Operating Temp. Range (Ambient)** | -45°C to +132°C ("D"-Ring)<br>(-50°F to +270°F)<br>-34°C to +121°C (Nitrile)<br>(-30°F to +250°F)<br>-26°C to +204°C (Fluorocarbon)<br>(-15°F to +400°F) |
| **Filtration** | ISO-4406 18/16/13,<br>SAE Class 4 |
| **Fluids** | Mineral-based or synthetic with lubricating properties at viscosities of 45 to 2000 SSU (6 to 420 cSt) |
| **Approx. Weight** | |

## Performance Curve

**Pressure Drop vs. Flow** (Through cartridge only)

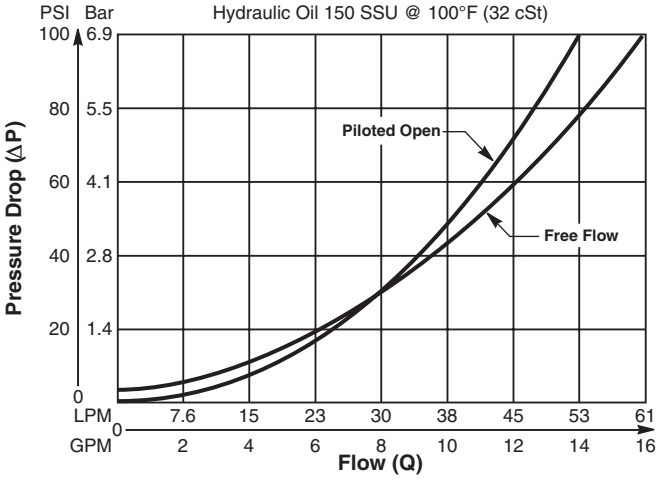

## Dimensions Millimeters (Inches)

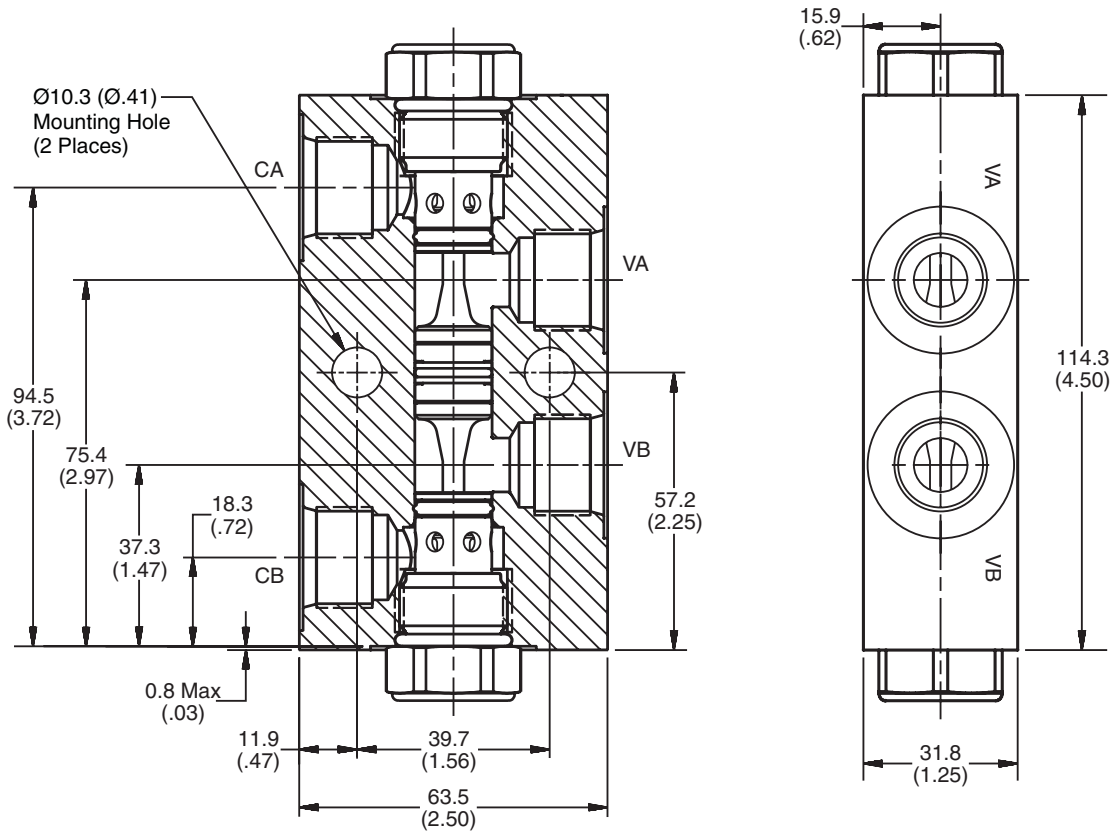


## Ordering Information

| CDP | | | | | — | |
|---|---|---|---|---|---|---|
| 10 Size Dual Pilot Piston P.O. Check Valve | Model Description | Piston Type | Cracking Pressure | Seals | | Port Size |

| Code | Model Description |
|---|---|
| **103** | 3000 PSI Series |
| **H103** | 5000 PSI Series |

| Code | Piston Type |
|---|---|
| **P** | Pilot Piston without seal |
| **A** | Pilot Piston with seal<br>Note: Requires 1.4 Bar (20 PSI) crack minimum. |

| Code | Cracking Pressure |
|---|---|
| ***Omit** | 0.3 Bar (5 PSI) |
| **20** | 1.4 Bar (20 PSI) |
| **50** | 3.5 Bar (50 PSI) |
| **65** | 4.5 Bar (65 PSI) |
| **80** | 5.5 Bar (80 PSI) |
| **100** | 6.9 Bar (100 PSI) |

***Not available with "A" option.***

| Code | Seals / Kit No. |
|---|---|
| **Omit** | "D"-Ring / (SK10-2) |
| **N** | Nitrile / (SK10-2N) |
| **V** | Fluorocarbon / (SK10-2V) |

| Code | Port Size | Material |
|---|---|---|
| **A8T** | SAE-8 **(CDP103 Only)** | Aluminum |
| **8T** | SAE-8 **(CDPH103 Only)** | Steel |